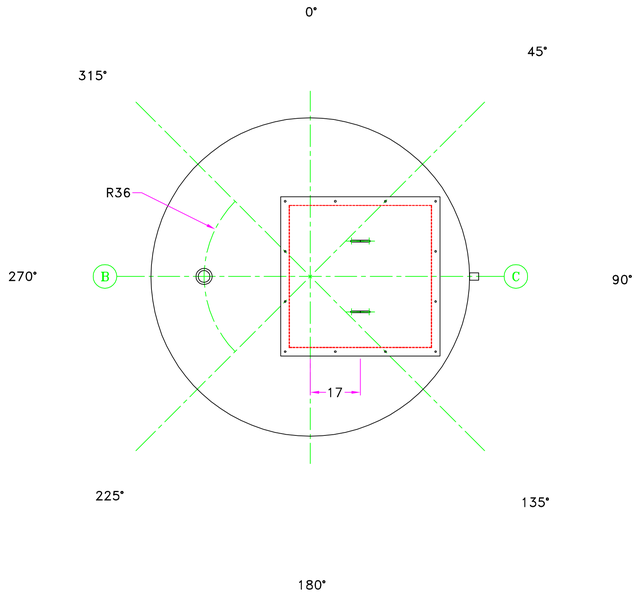

PLAN

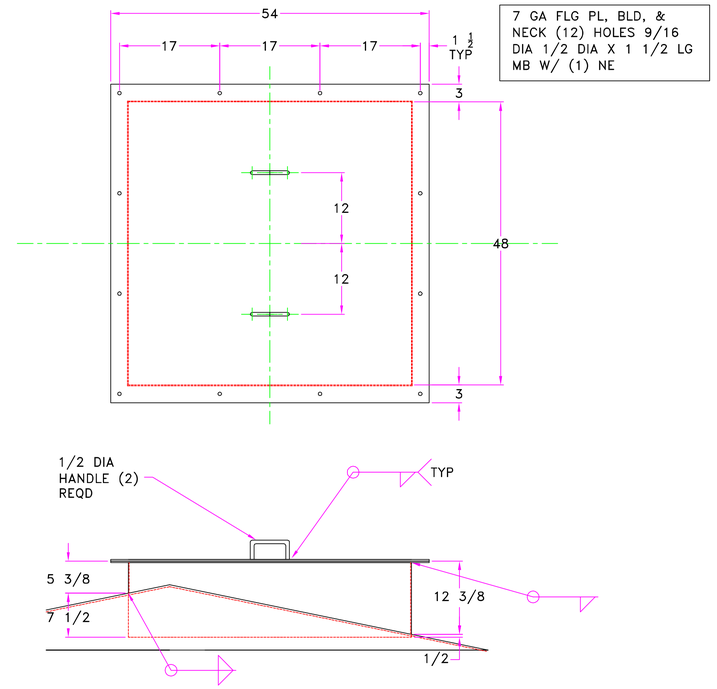

7 GA FLG PL, BLD, & NECK (12) HOLES 9/16 DIA 1/2 DIA X 1 1/2 LG MB W/ (1) NE

HATCH (A)

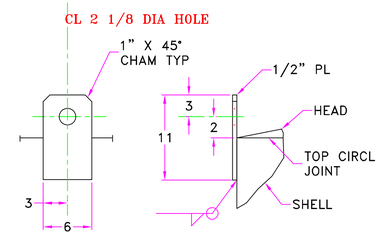

LIFT LUG

(2) REQD EQ SP 180° APART
LOCATE BEST

GENERAL NOTES

FABRICATION

PER: MWC SHOP PRACTICES
LABEL REQD: NO
DESIGN PRESSURE: ATMOSPHERIC
DESIGN TEMPERATURE: AMBIENT
RADIOGRAPH: NONE
CORROSION ALLOW: NONE
STRESS RELIEVE: NONE
TANK TEST: 2–3 PSI AIR WITH SOAP SUDS

MATERIAL

SHELL: SA–36
HEADS: SA–36
MANWAY: SA–36
FLGS & BLINDS: SA–105
CPLGS: SA–105
PIPE: SA–106–B
FITTINGS: NONE
INT ATTACHMENTS: SA–36
EXT ATTACHMENTS: SA–36
INT BOLTS/NUTS: NONE
EXT BOLTS/NUTS: CS
GASKETS: NON ASB
SHIPPING COVERS: STD

SANDBLAST

EXT: SP–6
INT: SP–10

PAINT

EXT: WHITE
INT: POTAPOX

CAPACITY

EST CAPACITY: 6,000 GALLONS
EST EMPTY WT: LBS

REFERENCE

ALL NOZZLE & MANWAY BOLT HOLES TO STRADDLE RADIAL CENTERLINES OR THEIR PARALLEL LINES, U.O.N.

REF DWGS: NA

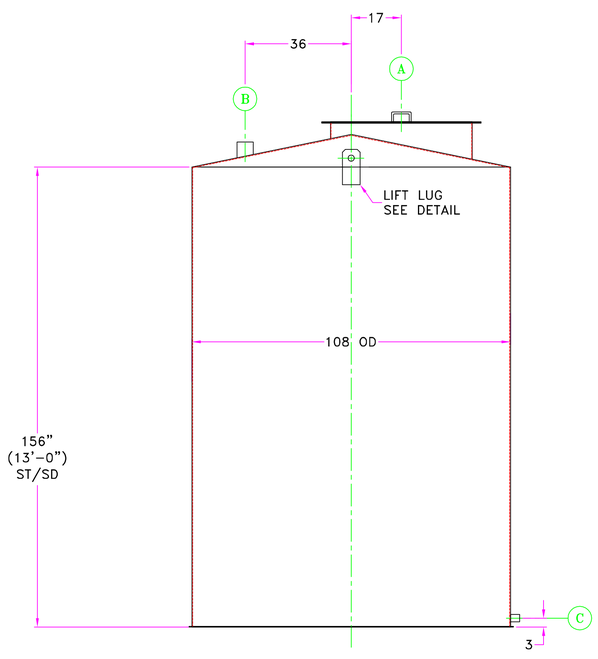

ELEVATION

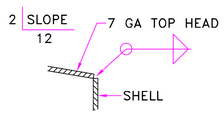

DETAIL @ WELD JOINT

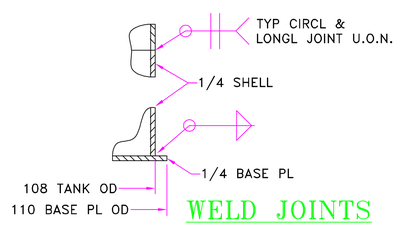

WELD JOINTS

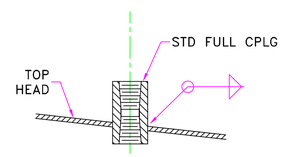

FULL CPLG (B)

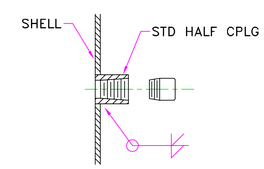

DRAIN (C)

MARK	REQD	SIZE	NECK	RATING	TYPE	DETAIL SHEET	SERVICE
C	1	1 1/2		STD	HALF CPLG	1	DRAIN
B	1	4		STD	FULL CPLG	1	
A	1	48 X 48	7 GA		FAB	1	ACESS HATCH

SCHEDULE

NO.	DATE	BY	REVISION

APR 21, 2015
FOR APPROVAL ONLY

NO. REQD 1 | ITEM NO.

MODERN WELDING CO. OF IOWA, INC.
PO Box 806
2818 Mt Pleasant St
Burlington, IA 52601
PHONE NO (319)754–6577

UNIVERSITY OF CHICAGO
108 OD X 13'–0" ST–SD SW AG VERTICAL TANK

DATE 4–21–15 | SCALE: NONE | DWN BY KM | CHKD CS | APRD CS
CUST. P.O. NO. | REV 0
JOB NO. 080
DWG NO. | SHT NO. 1 OF 1