Version 2.2
April 30, 2015

ANNIE Run I Installation Plan

1 Introduction

In this document we outline the technical details necessary for the installation of ANNIE Phase I in the SciBooNE Hall.

Implementation of ANNIE Run I will consist of installing of the detector volume, instrumented with an array of conventional phototubes and a smaller Gd-loaded acrylic subvolume, then filling the tank with purified water. A significant fraction of the instrumentation and electronics will be loaned from collaborators and contributors. The commissioning of the detector will largely be handled by the ANNIE collaboration.

Engineering and technical support by Fermilab is required in three areas:

- Installation of the detector volume into the hall
- Modifications to the experimental hall to enable access to the inner volume and outside of the detector
- Building the necessary infrastructure to bring water in and out of the tank

Planned installation for the ANNIE tank would occur at the end of August. Given a 10-12 week lead time on the manufacture of the tank, the approval and ordering of this item drives the experiment's schedule.

2 Tank Installation

The design for the ANNIE water volume is an upright cylindrical welded-steel tank. Two key features of this tank make it the best choice for the experiment:

- Ease of access to the tank interior (from above) after installation.
- The ability to fill the tank with an extra buffer layer of water to shield against "skyshine" neutrons.

A welded steel tank is preferred over other structures, as it can be lowered into the hall ready-built, it does not require any additional support structure (beyond the concrete floor), and it is amenable to welding additional fixtures as needed.

Modern Welding Co. of Iowa, Inc. has quoted a tank at $12,985.00 plus $750 shipping, and can produce the tank in 10-12 weeks. This is the single longest lead-time component of the Run I build. If a purchase order can be placed by the beginning of June, it will be delivered at the same time as the PMT system from the WATCHMAN collaboration would

be available.

Modern Welding can put a 48-inch access port in the top. The tank will be 9 feet in diameter and 13 feet tall. It weighs less than 2 tons and comes built with two lift lugs for crane attachment (see Fig 1). We estimate that it fits in the hall with roughly one-foot clearance, based on detailed examination of the MRD blue prints (see Fig 2).

The tank interior will be plastic lined, with the photosensors attached to a wireframe structure within the liner. The design of the wireframe structure and PMTs supports is in progress. The design will be finalized by early-to-mid June. PMT installation will not occur sooner than September 1.

3 Modifications to the Experimental Hall

Once lowered into ANNIE Hall, the tank will bisect the lowest level of the experimental area. Access and mobility on this bottom floor will not be necessary during the operation of the detector. However, temporary access to the enclosed area must be planned, should it be required to access the PMTs on that side of the MRD.

We will require frequent access to the inside of the tank, by way of the port on top. The height of the tank will be level with the first floor walkway (732 feet level) above the hall. It should be possible to modify the scaffolding and balconies to build a protected walkway to that access port. A removable ladder needs to be installed to enable climbing access in and out of the the tank.

After tank installation, it will be necessary to install the PMT system on a structure inside the tank. We are not sure, given the 48-inch access port, whether this will be considered a confined space. There will be sustained commissioning activity inside the tank for periods of weeks. Further engineering and safety reviews will be required to evaluate that access. These reviews can proceed over the course of the summer. However, initial approval to at least install the tank should proceed quickly, given the lead time on tank manufacturing.

4 Water System

There is currently no source of water in ANNIE Hall. We need a mechanism to fill the $\sim$23.4 tons (6,185 gallons) tank and draining as needed. The water needs to be purified once, before execution of the experiment.

We propose a simple water system, based at the surface level. Water purification and Gd mixing should be done once on the surface, before beginning the measurement. The initial water supply need not be ultra-pure. The water supply could be carried in via a firehose.

The water purification process will likely include Reverse Osmosis (RO). Purification by RO require a large stream of waste-water. The total volume of water needed will be roughly a factor of 4 larger than needed to fill the tank, bringing our total water needs to around 25,000 gallons.

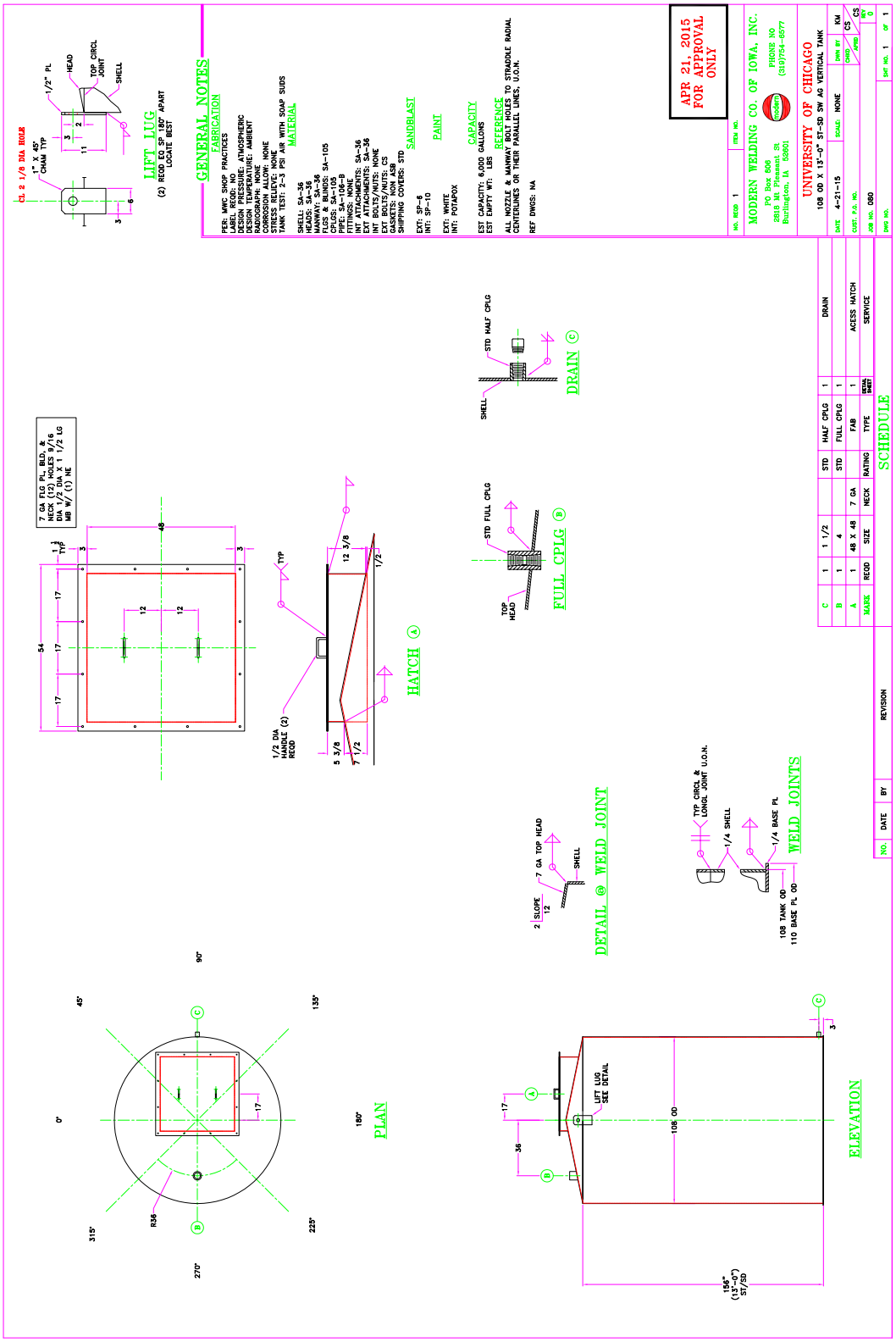

Figure 1: Blueprint of the steel tank.

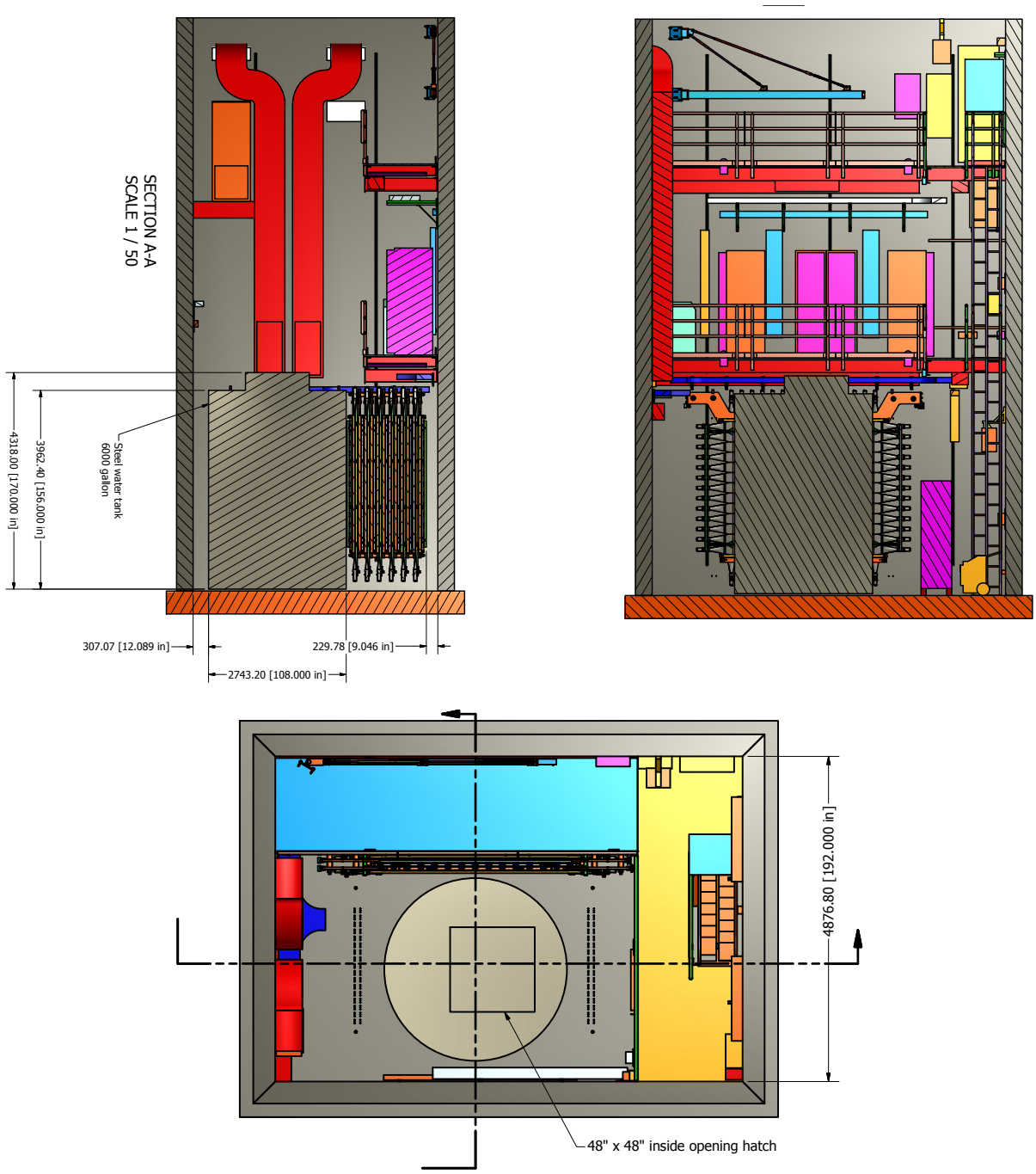

Figure 2: The layout of the proposed tank in the SciBooNE Hall, side view on the left, forward view on the right, and overhead view on the bottom.

On preliminary examination, the nearest water is in the target building outside fire hydrant. Unfortunately, that water is known to have a small amount of tritium in it. Thus if we use Reverse Osmosis (RO) and had to dump waste water there is no place to put it and it cannot send it to the drainage ditch. We do not yet know if there is pure water inside the target hall.

It is possible to make the pure water by RO at another point on-site and deliver to ANNIE in potable water tanker trucks. We would then fill from the surface and recirculate using only the deionizers (no waste water), filters, and sterilizer. Having examined options for truck based delivery, the largest tanker trucks available for rent are 3,700 gallons and cost $5,400 for 4 weeks. It will be cost prohibitive to rent two of them indefinitely, for use as long term storage. If a surface storage proves to be useful, we can purchase a plastic tank to be filled by a single tanker truck over a period of roughly two weeks.

UC Davis will provide a skid-mounted water filtration system (pictured in Fig 3, schematic in Fig 4) capable of:

- 0.5 and 5 micron filtration
- reverse osmosis
- dionization
- UV sterilization

We plan to purify the water at the beginning of each run, expecting that water quality should not degrade light transport over the 3 meter length scales relevant to the experiment. We can use the filter system to monitor the water quality for some time in order to ensure that nothing is quickly leaching into the water. In Run I, the tank volume is filled only with pure water. In later runs, the Gd can be mixed in by bypassing the filters and using the purifier as a recirculation system.

The biggest concern for long-term operation is contamination from biologics. We will request a source of Nitrogen, to provide an oxygen-free blanket over the water surface and suppress the bacterial growth.

The Davis water filtration system comes with a submersible pump, capable of pumping tank water back to the surface, so we expect to keep the skid at ground level, either inside or outside the Hall. The water skid has a good place with power and room on the top level in the back corner of the hall. The only issue inside the hall enclosure is a jib boom winch, which would not be useable while the skid was there. We will also make a drip pan with drainage to the sump at the bottom of the hall. The sump has two pumps that keep the hall dry, so this is feasible.

Figure 3: The water filtration system.

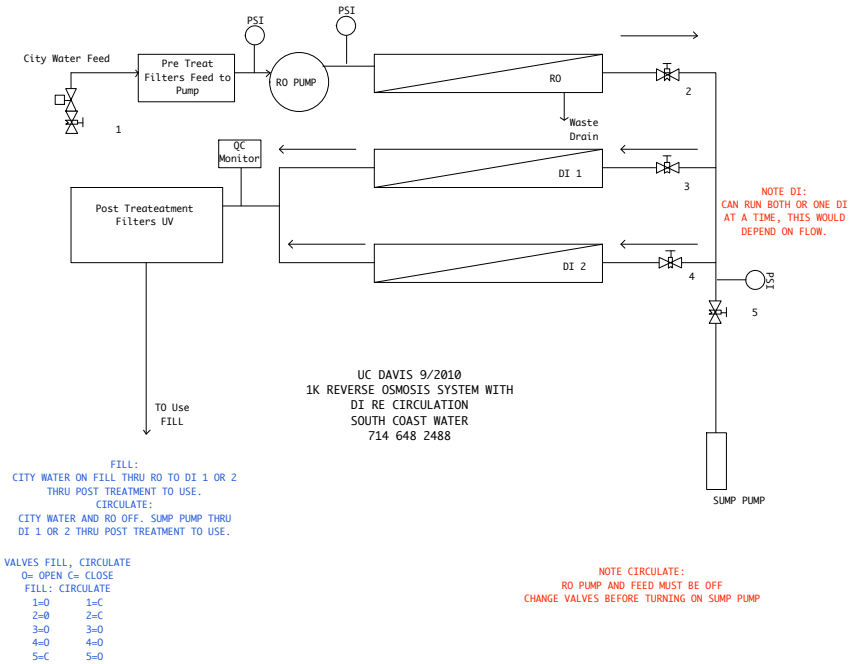

Figure 4: The water filtration system.